X^5 - SpaceSaver X-ray Inspection System

Designed for Food & Packaging Industries

X-Ray Detection

Product Highlights

- X-Ray system designed to be integrated into line with optional free standing reject, Available in 300mm and 500mm belt width models
- Good detection of all metals, bone, glass and dense plastics, even in foil trays or metalized film
- Belt Speeds of up to 75m/Min with Pack Speeds of up to 185 P/Pmin *(Based on a typical Ready Meal size)*
- Fast inspection with the Set-up wizard automatically optimising the X5 Spacesaver for each product type allowing you to learn and switch within minutes
- Reliable Heavy duty conveyor components, built for 24/7 operation with pass key Protective Set-up for added security and control
- Windows 10 PC with modem, Ethernet and Front Access USB Port

Versatile Detection with AAT Technology

AAT Technology allows 0.4mm Diode setting for very small metal contaminants, with the option of switching to 0.8mm & 1.6mm to find softer contaminants such as Bone, Ceramic and Glass.

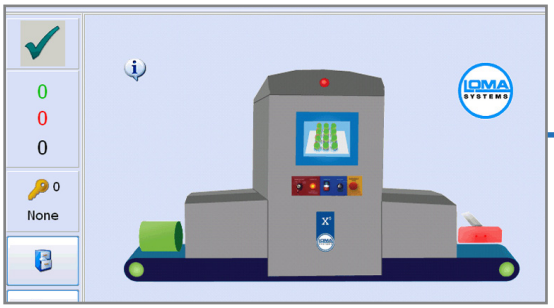

Easy to Use Intuitive Full Colour Touchscreen

The X^5 Spacesaver includes an Icon driven full colour touchscreen control interface including multi-level password access and data logged events for traceability (designed to comply with CFR21 Part 11 requirements)

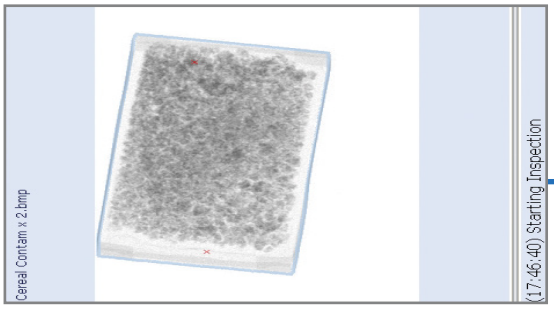

Data Logged Events and Images for Full Traceability

Date stamped reject images designed to comply with CFR21 Part 11 requirements are internally stored and can be removed via USB or Ethernet.

Compact System Optimises Valuable Space

The X^5 Spacesaver is built with Loma's strong experience of food industry inspection systems and offers first-class CCP protection in the smallest footprint possible at just 1000mm line length.

Technical Specification

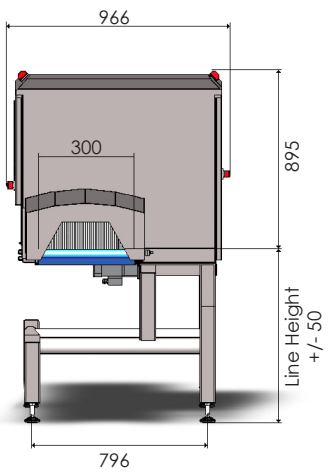

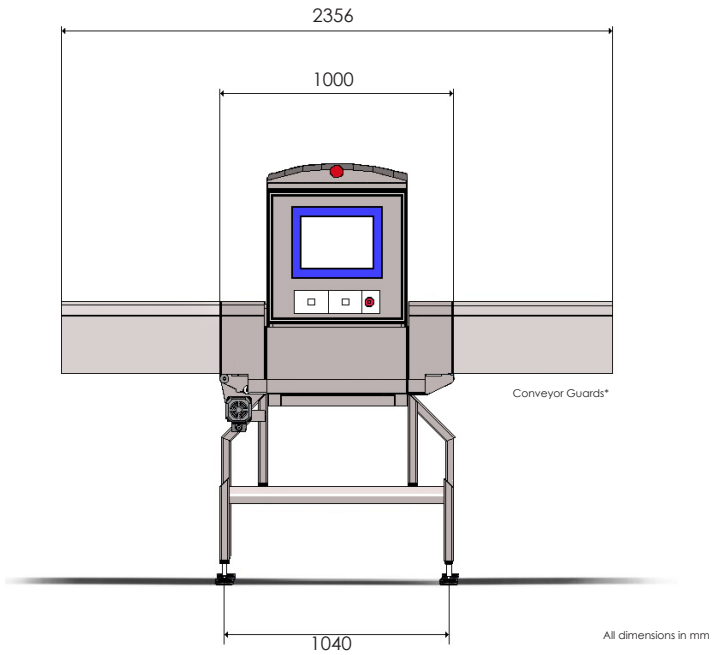

Machine in picture is based on 300 Model

Finish	304 Brushed Stainless Steel
System Length	1000mm
Line Height Options	700mm - 1000mm +/- 50mm
X-Ray Output	150W (60kV 2.5mA)
IP Rating	IP66
Belt Width	300/500mm
Belt Type	PU Blue Belt
Max Product Weight	6kg
Speed Range	20-75 m/min
Power Requirements	230/1ph/50Hz N+E / 110/1ph/60Hz N+E
Cooling	Vortex or AC Air Conditioning
Operating Environment (Vortex Standard)	2 -10°C with warm up 10 to 25°C Vortex
Operating Environment AC Air Conditioning (Option)	25°C to 35°C AC Air Conditioning (Cabinet reduced to NEMA 4X with AC Option)
X-Ray Safety	Leakage less than 1 µSv/h
Detection Algorithms	15 Multilayers Algorithms combined in any combinations
Reporting	Event, Batch, Shift, PVS
Data Retrieval	Via USB, Ethernet, Enet

Product Inspection Sizes

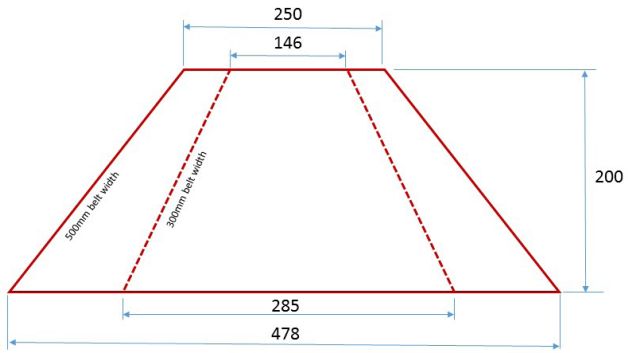

*Although the machine installation requires a line length of 1000 mm, the system is supplied with extended covers to prevent limb access into the x-ray chamber and provide compliance with the Machinery Directive. During installation the extended covers should be fitted or equivalent protection be provided by other inline equipment (e.g. a reject conveyor) or guarding on both the indeed and outfeed.

Automatic Reject Options

The X⁵ Spacesaver is supplied as standard with two output signals suitable for triggering third-party reject systems. Alternatively, it can be specified with an standalone automatic reject station (with retail compliance) with the following options:

- Pusher
- Air-blast, single nozzle
- Air-blast, dual nozzle

Loma Systems is a registered trademark of Illinois Tool Works Inc. (ITW). Other names, logos, icons and marks identifying our products and services referenced herein are trademarks of ITW and may not be used without the prior written permission of ITW. Other product and company names listed are trademarks or trade names of their respective companies. Copyright © 2019 Illinois Tool Works Inc. All rights reserved. All of the specifications shown in this document are subject to change without notice.

X5SS_893201905